Snoeks AUTOMOTIVE

MERCEDES-BENZ VITO

Crew Cab

CREW CAB

Mercedes-Benz Vito

The perfect solution

A Mercedes-Benz Vito that is equipped with a Crew Cab from Snoeks is the ideal solution for transporting people and cargo safely, comfortably and efficiently.

Merged Perfection

The Snoeks Crew Cab series is specifically designed for the Mercedes-Benz Vito and therefore fits seamlessly into the vehicle and matches the design of the front cab. That is what we like to call, "Merged Perfection".

For every type of Vito

No matter what type of Vito you have, we have a suitable Crew Cab in our program. In addition, we offer three different trim levels, with which you can choose the desired equipment level.

1

2

3

4

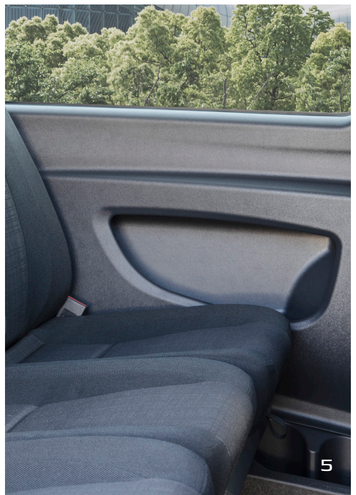
5

6

7

UNIQUE BENEFITS

Mercedes-Benz Vito Crew Cab

1. Maximum comfort

A Vito with a Crew Cab offers up to three additional seats with maximum comfort for your passengers.

2. Long objects

The practical loading space under the bench allows to transport long items.

3. Unique character

There is a choice between three Trim levels: Comfort, Comfort ease and Comfort Plus. From the Comfort Plus variant you receive 3 Individually adjustable seats.

4. Optimal safety

The Crew Cab meets the European safety requirements. All seats are equipped with 3-point safety belts and functional headrests.

5. Practical interior

Your passengers can easily store small items in the handy storage compartments in the bench and in the sidewall.

6. Your businesscard

In every detail, the Vito Crew Cab looks stylish and is completely in line with the design of your Mercedes-Benz Vito.

7. Connectivity

Charge your smartphone or laptop using the 12V / USB connections.

Snoeks AUTOMOTIVE

TRIMLEVELS

Mercedes-Benz Vito Crew Cab

Comfort

- A comfortable three-seater bench
- Adjustable and tilting headrests
- 3-Point inertia-reel safety belt on all seating positions
- Storage pocket in bench cover
- Loading space under the bulkhead
- Wear-restistant floor and step-in cover
- Robustly finished side panels

Comfort Plus

extra compared to Comfort:

- Three individual sliding seats with two armrests

Options

- Three individual seats with two folding seats (storage pocket under the seats) - only for the Comfort Plus variant
- Multifunctional removable center console (only for folding seat or sliding seats)
- Seat protection covers (only for folding seat or sliding seats)
- Carpet mat
- Luxury set in light
- Privacy glass
- Load area package

BASE VEHICLE & POSSIBILITIES

	A1		A2		A3	
	COMFORT	PLUS	COMFORT	PLUS	COMFORT	PLUS
SLIDING DOOR						
Sliding door right	o	o	o	o	o	o
Sliding door left and right	Δ	Δ	Δ	Δ	Δ	Δ
WINDOWS						
Factory fi tted windows	o	o	o	o	o	o
No factory fi tted window	Δ	Δ	Δ	Δ	Δ	Δ

o Available
Δ Available for an additional charge
x Not available

FABRIC

Lima

Skai

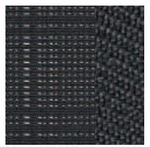

Tunja

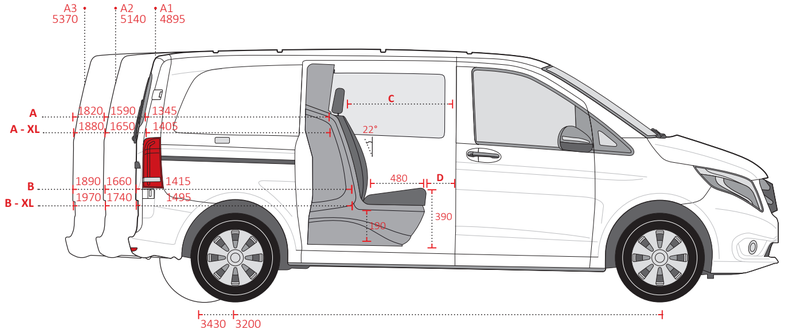

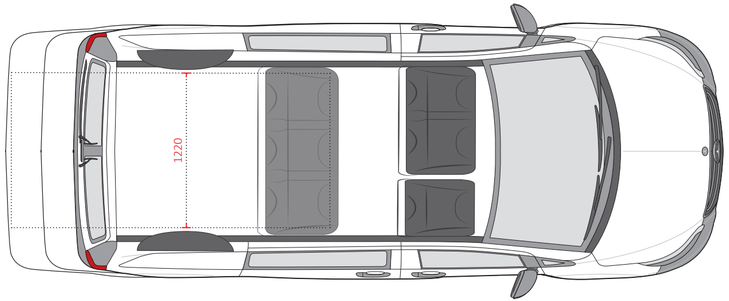

* Measured in relation to fixed co-driver's bench

Note:
Crew cab conversion weight is 105 kg.

	A	B	C	D
A1	1345	1415	770	235
A1 XL	1405	1495	730	165
A2	1590	1660	770	235
A2 XL	1650	1740	730	165
A3	1820	1890	770	235
A3 XL	1880	1970	730	165

info@snoeks.com
www.snoeks.com
+31 (0) 252 629 529
Kunaweg 3, 2153 NC, Nieuw-Vennep, The Netherlands

© All rights reserved. Snoeks Automotive reserves the right to change or improve its products and to make changes in the content of this brochure without obligation to notify any person or organization of such changes or improvements.
The images shown may differ from the standard trimlevel.

SA 200511